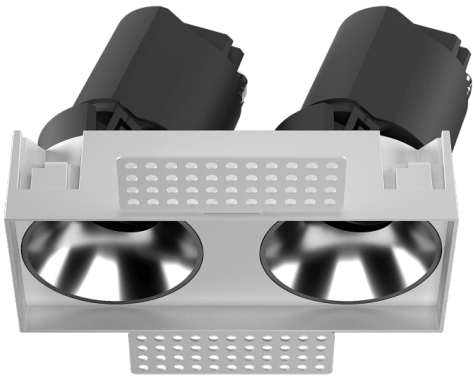

## ZENITH IP65SX2 Smart Trimless

| | |
|---|---|
| **Item code** | **86.D287.1349.01** |
| **Product type** | **Indoor** |
| **Category** | **Downlights** |
| **Family** | **ZENITH** |
| **Subfamily** | **ZENITH IP65SX2 Smart Trimless** |
| **Pictograms** | 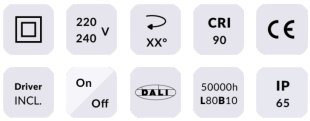 |

| **Dimensions** | |
|---|---|
| **Product dimensions (mm)** | **163x74xH91mm** |

**Scheme**

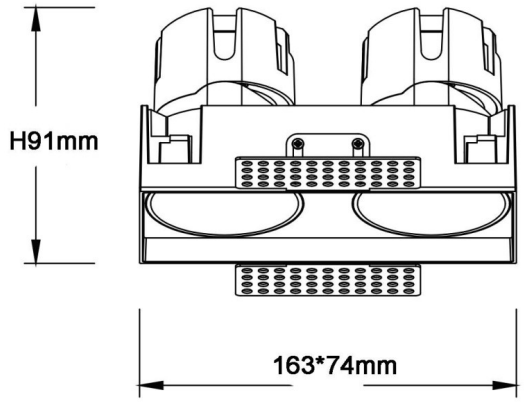


| **Product** | |
|---|---|
| **Real power (W)** | **2X12** |
| **Real luminous flux (Lm)** | **2X960** |
| **Luminous efficiency (Lm/W)** | **80** |
| **Beam angle (º)** | **60** |
| **Life time (h)** | **50000 h L80B10** |
| **IP** | **65** |
| **U. G. R** | **19** |
| **Control gear** | **DALI wireless Casamby** |
| **Colour temperature (K)** | **3000** |
| **Colour consistency (SDCM)** | **SDCM3** |
| **CRI** | **90** |